TR156-111A

15.6" Intel® Elkhart Lake™ 11th Celeron® J6412
Industrial Panel PC



Features:

- Intel® Elkhart Lake™ 11th Celeron® J6412
- Industrial display, multi-point capacitive touch screen
- 1*DDR4 SO-DIMM memory slot, supporting up to 32GB
- 4*USB3.0, 4*RS232(One of them RS232/422/485 optional, default RS232)
- 1*HD、1*VGA(Internal pin)
- 2*Intel® Gigabit network card, among which LAN1 supports network wake-up
- Fanless design
- Panel protection level can reach IP65

Specifications:

System Hardware

CPU	Intel® Elkhart Lake™ 11th Celeron® J6412	Storage	1*M.2 2280 SLOT (SATA/Nvme (PCIe X1) interface type automatic recognition)
Memory	1*DDR4 SO-DIMM memory slot, supporting up to 32GB		

Display

LCD Type	15.6″ LCD	Luminance	450 cd/m²
Touchscreen	Capacitive touch screen	Contrast Ratio	800: 1
Max. Resolution	1920*1080		

OS

OS	Windows10/11、Linux

I/O Ports

USB	4*USB3.0（4*USB2.0 built-in）(USB3.0-3、4 support 1.5A，1、2 support 0.9A)	Audio	1*4-section 3.5mm Audio Jack (supports headphone audio output and microphone audio input); 1*Horn 8 ohms 3 watts
COM	COM1:1*RS232/422/485 jump cap optional (default RS232), supports 5V/12V/RI # optional; COM2/3/4: 1 out 3 serial port cables 1 out 1*RS232 and 2*RS485, or 1 out 3 serial port cables 2 out 3*RS232/485 jump cap options (default RS232); 2*RS232 built-in(need to customize export)	Video	1*HD, 1*VGA pins can be customized for export
		DC Port	Phoenix terminal 3pin
		Mini PCIe	1*Mini PCIe(WiFi+BT/4G/5G Optional，One out of three)
		SIM Card	1*Built-in SIM card holder
		GPIO	NA
LAN	2*1000M LAN port		

Power

Power	10-32V wide voltage input, standard with 12V/5A adapter

Environment

Vibration Protection	5-17Hz/1.0mm amplitude; 17-200Hz/1.0g acceleration	Operating Temp.	-10℃~55℃ (wide temperature optional)
		Storage Temp.	-30℃~70℃ (wide temperature optional)
Shock Protection	10g acceleration, 11ms cycle	Humidity	95% @40℃, non-condensing
IP Rating	Front panel IP65		

Mechanical

Dimension (WxHxD)	408*257.3*55.9mm	Material	Aluminum alloy
Weight	4.09Kg	Mounting	VESA mounting: 100*100mm
Color	Silver		Embedded installation: 396*245mm

Dimensions:

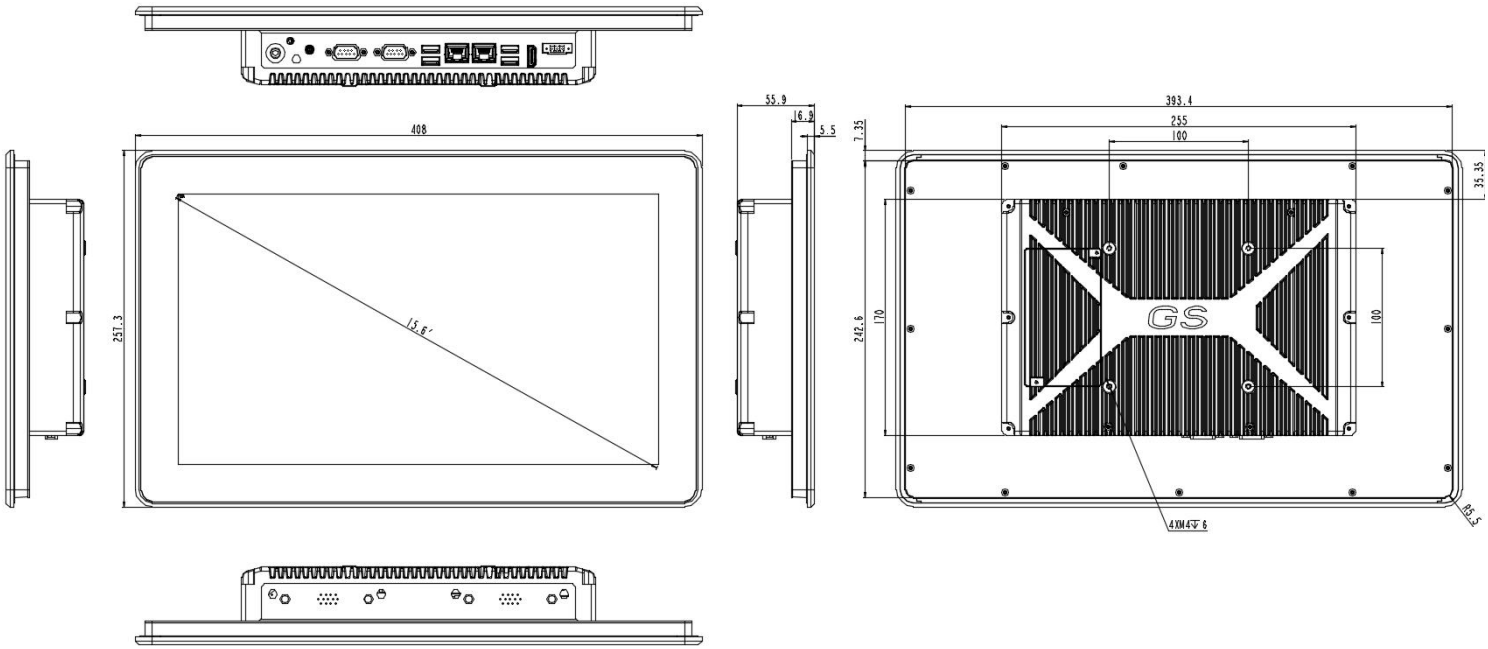

COM2/COM3/COM4 (accessory: 1 out 3 serial port cable 1, part number 2.308.00140) is defined as follows: (COM1 is the standard definition, omitted)

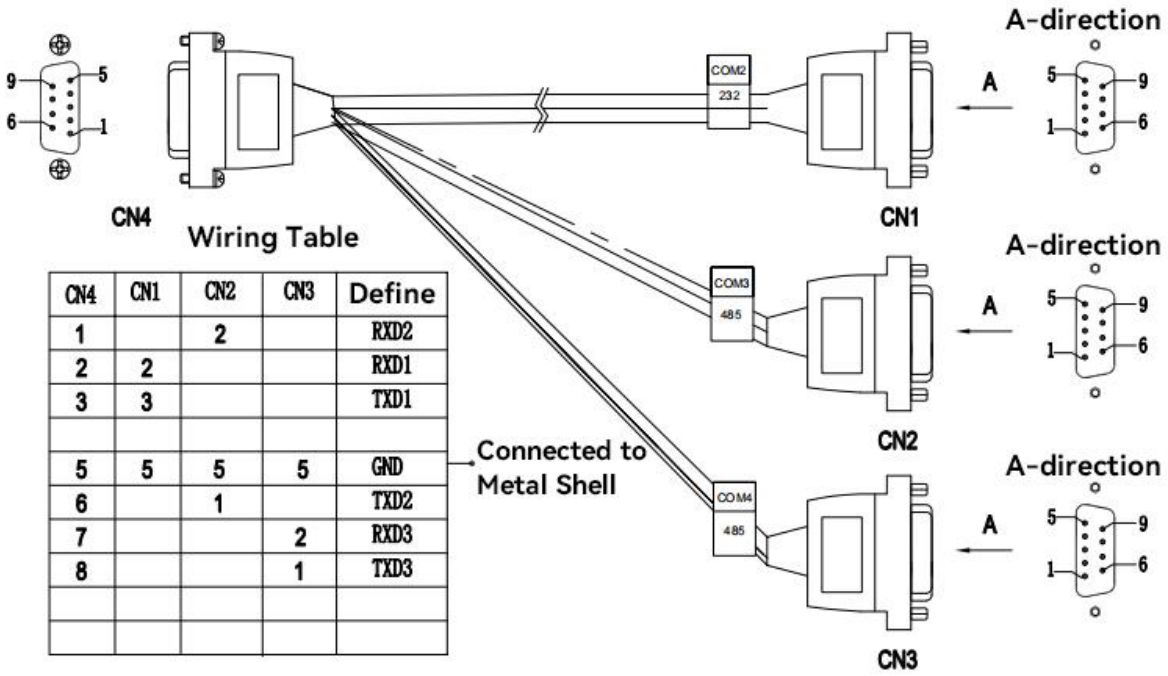

CN4	CN1	CN2	CN3	Define
1		2		RXD2
2	2			RXD1
3	3			TXD1
5	5	5	5	GND
6		1		TXD2
7			2	RXD3
8			1	TXD3

COM2/COM3/COM4 (accessory: 1 out 3 serial port cable 2, part number 2.308.00104) is defined as follows: (COM1 is the standard definition, omitted)

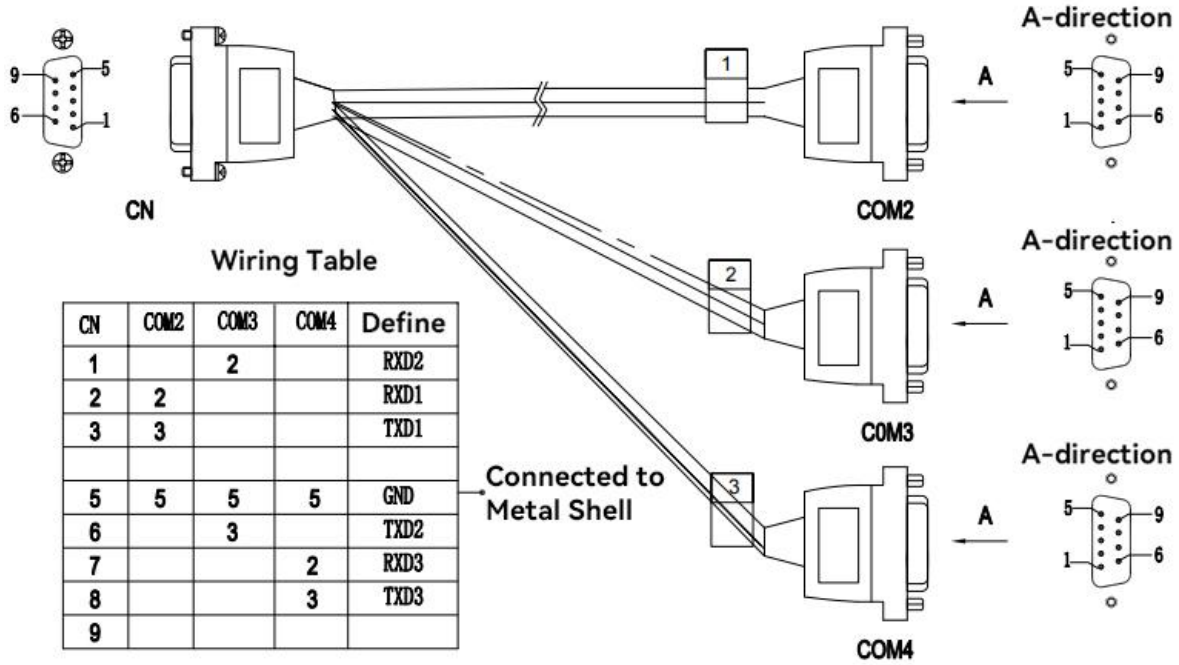

CN	COM2	COM3	COM4	Define
1		2		RXD2
2	2			RXD1
3	3			TXD1
5	5	5	5	GND
6		3		TXD2
7			2	RXD3
8			3	TXD3
9				